Notes:
1. Material: steel+plastic

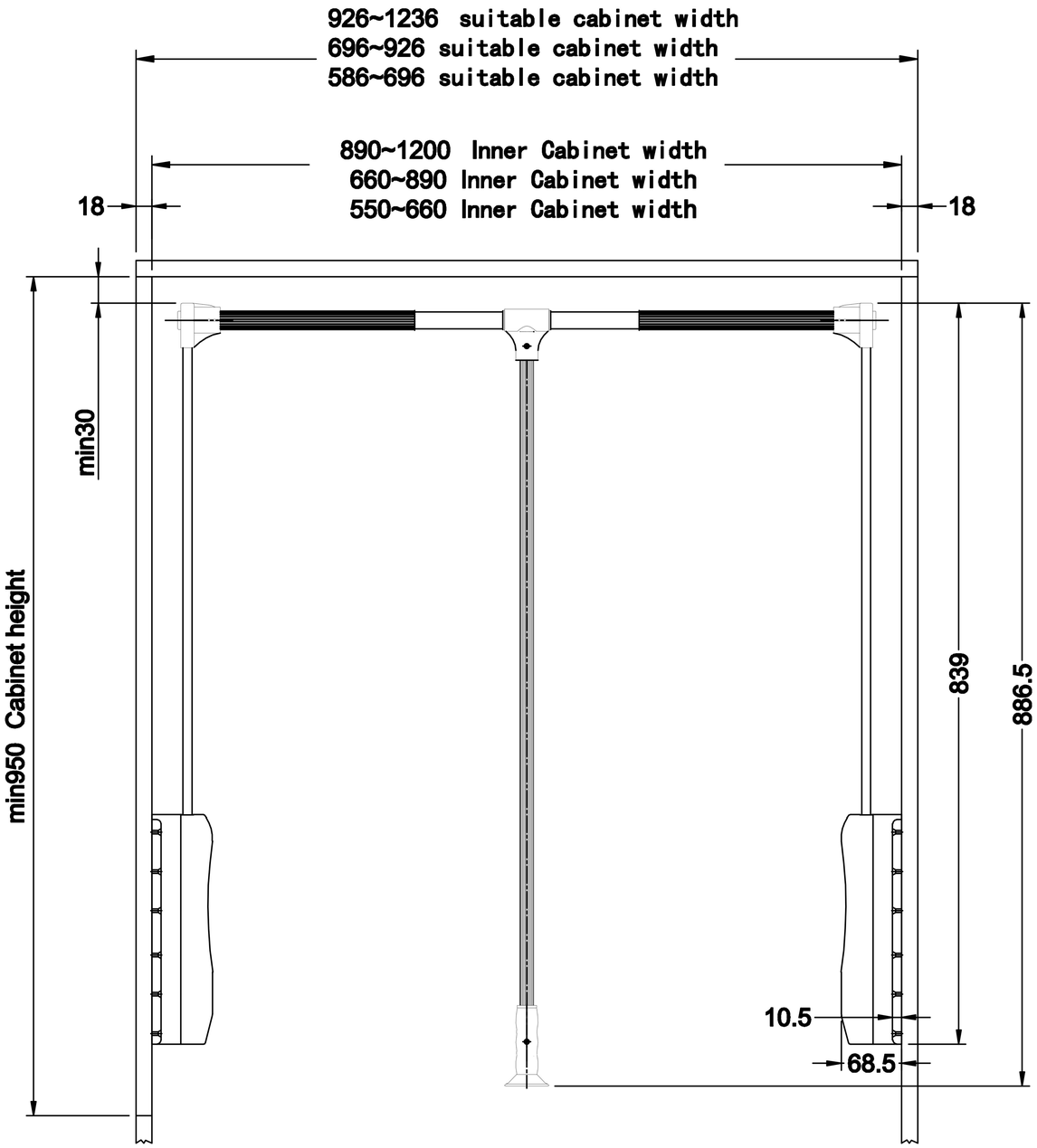

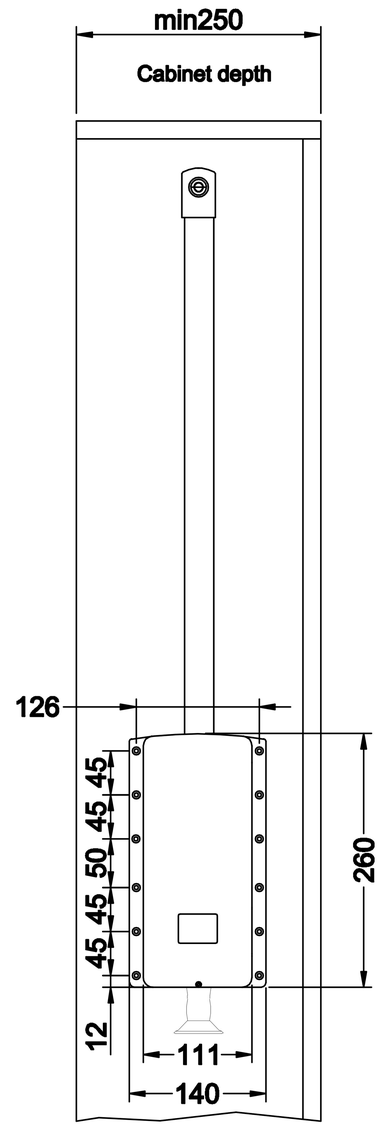

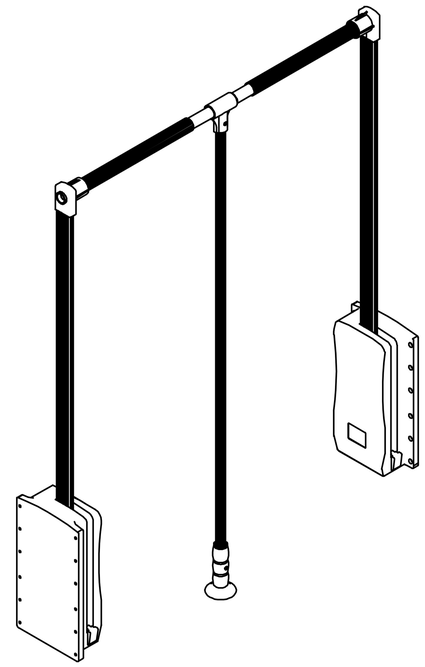

DIM.	0~3mm	3~10mm	10~30mm	30~100mm	100~300mm	300mm~ 以上
Tolerance	±0.1mm	±0.25mm	±0.5mm	±1mm	±3mm	±5mm

MARK	REV.	DESCRIPTION	BY	DATE

SHEET OF

www.ferramenta.cz

61.E010.A__.10
DRAWING NO.:

LEVEL výklopný věšák
TITAL:

THE LEVEL

DIMENSION CLASSIFICATION
CRITICAL
MAJOR

UNIT mm
SCALE

PAPER A4

APPROVED		DATE	
CHECK		DATE	
DRW.BY		DATE	